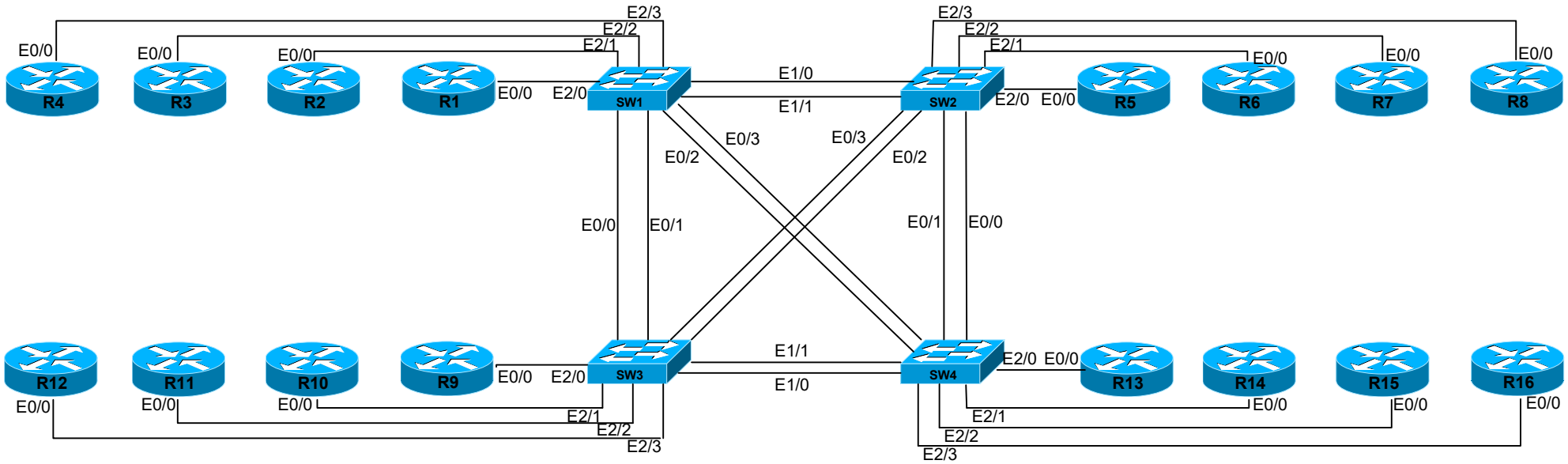
R4
R3
R2
R1
SW1
SW2
R5
R6
R7
R8
R12
R11
R10
R9
SW3
SW4
R13
R14
R15
R16
E0/0
E2/0
E2/1
E2/2
E2/3
E1/0
E1/1
E0/1
E0/2
E0/3

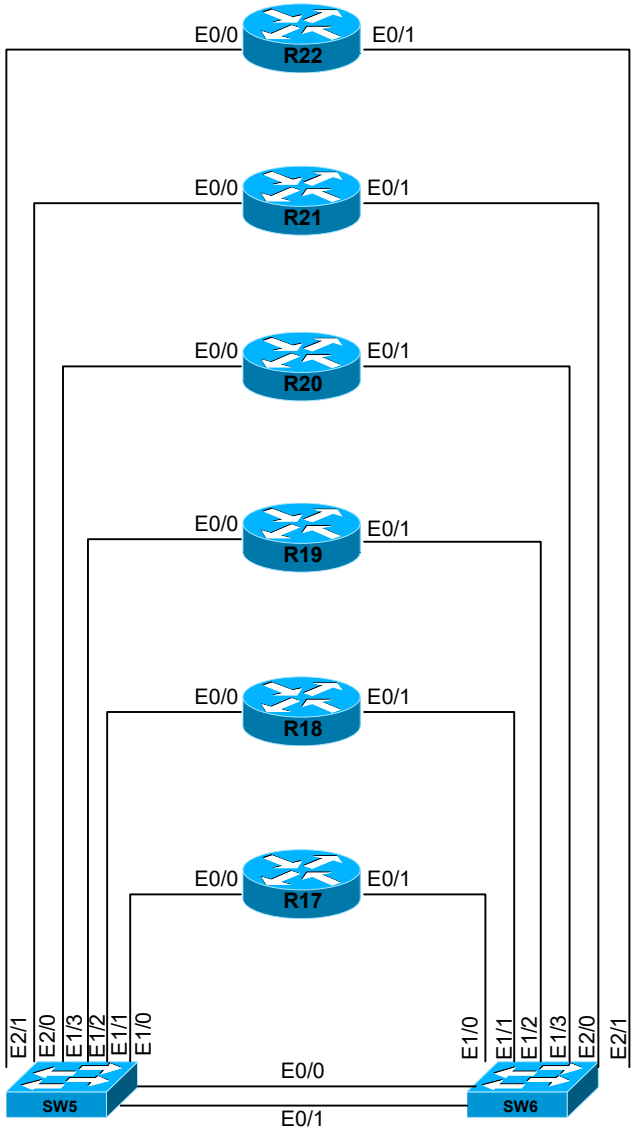
R22
E0/0
E0/1
R21
E0/0
E0/1
R20
E0/0
E0/1
R19
E0/0
E0/1
R18
E0/0
E0/1
R17
E0/0
E0/1
E2/1
E2/0
E1/3
E1/2
E1/1
E1/0
E1/0
E1/1
E1/2
E1/3
E2/0
E2/1
SW5
SW6
E0/0
E0/1

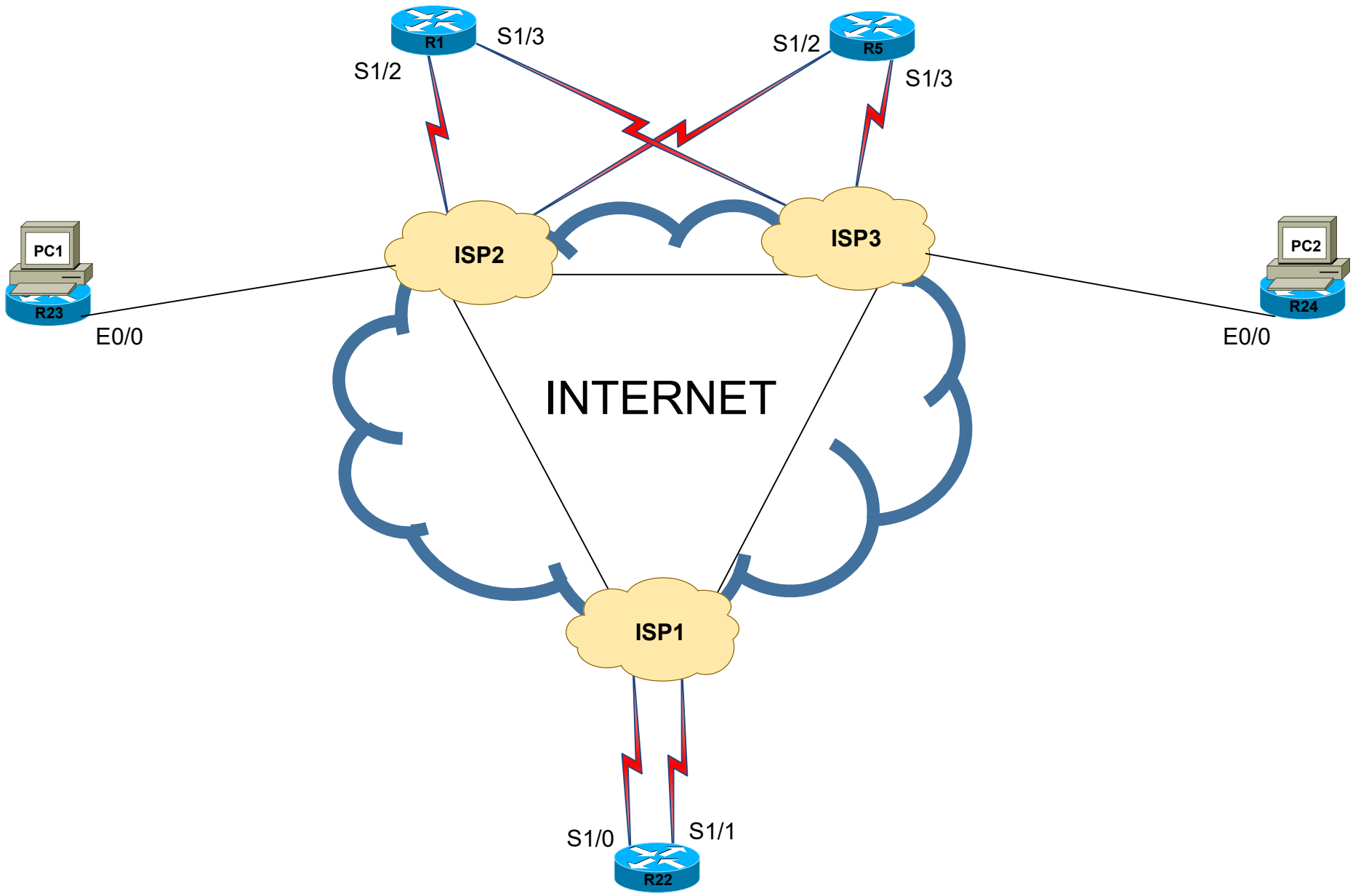
R1
S1/3
S1/2
S1/2
R5
S1/3
PC1
R23
E0/0
ISP2
ISP3
PC2
R24
E0/0
INTERNET
ISP1
S1/0
S1/1
R22

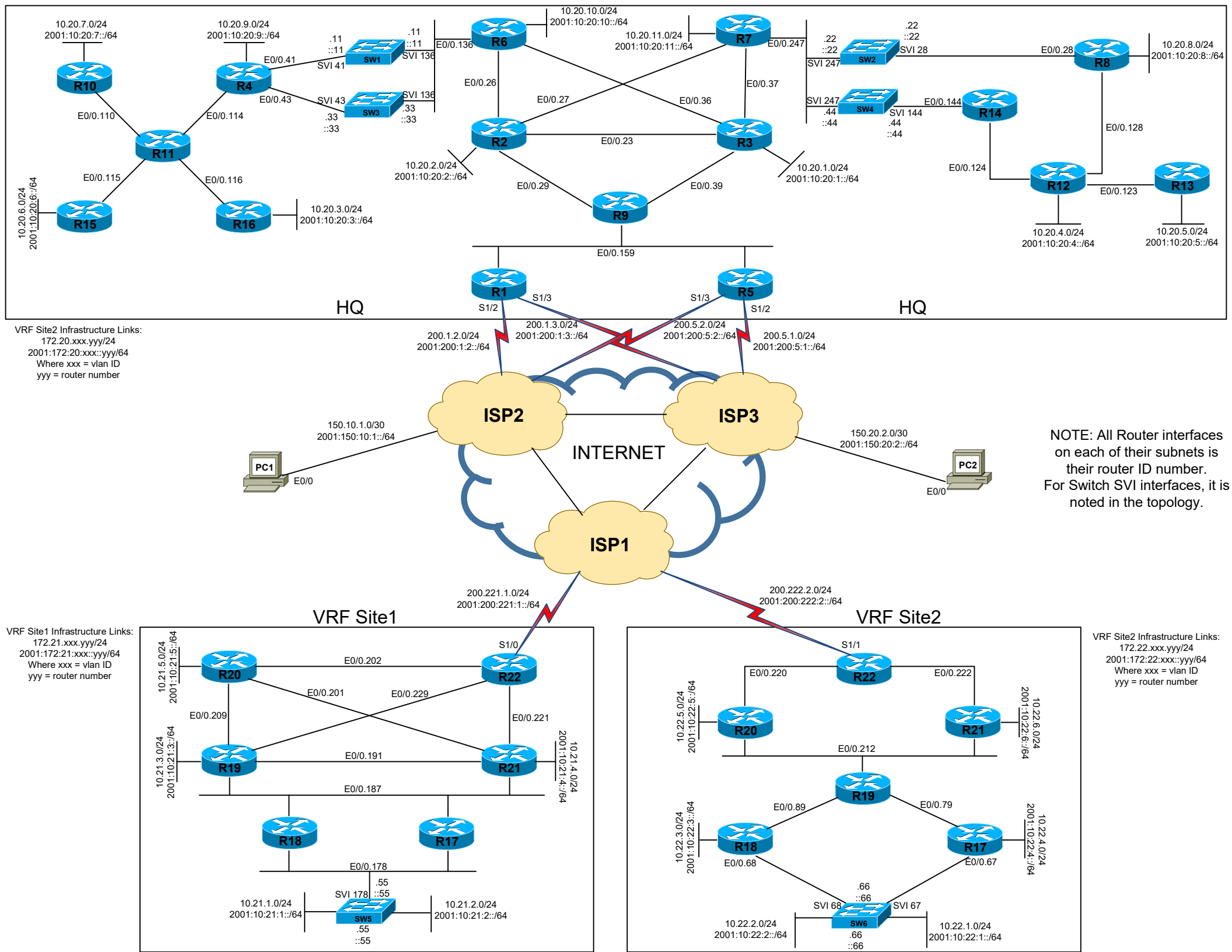
HQ
HQ
R1
R2
R3
R4
R5
R6
R7
R8
R9
R10
R11
R12
R13
R14
R15
R16
SW1
SW2
SW3
SW4
10.20.7.0/24
2001:10:20:7::/64
10.20.9.0/24
2001:10:20:9::/64
10.20.10.0/24
2001:10:20:10::/64
10.20.11.0/24
2001:10:20:11::/64
10.20.8.0/24
2001:10:20:8::/64
10.20.2.0/24
2001:10:20:2::/64
10.20.1.0/24
2001:10:20:1::/64
10.20.6.0/24
2001:10:20:6::/64
10.20.3.0/24
2001:10:20:3::/64
10.20.4.0/24
2001:10:20:4::/64
10.20.5.0/24
2001:10:20:5::/64
E0/0.41
E0/0.43
E0/0.110
E0/0.114
E0/0.115
E0/0.116
E0/0.136
E0/0.26
E0/0.27
E0/0.36
E0/0.37
E0/0.247
E0/0.28
E0/0.144
E0/0.128
E0/0.124
E0/0.123
E0/0.23
E0/0.29
E0/0.39
E0/0.159
SVI 41
SVI 136
SVI 43
SVI 28
SVI 247
SVI 144
S1/2
S1/3
S1/3
S1/2
VRF Site2 Infrastructure Links:
172.20.xxx.yyy/24
2001:172:20:xxx::yyy/64
Where xxx = vlan ID
yyy = router number
200.1.2.0/24
2001:200:1:2::/64
200.1.3.0/24
2001:200:1:3::/64
200.5.2.0/24
2001:200:5:2::/64
200.5.1.0/24
2001:200:5:1::/64
ISP2
ISP3
ISP1
INTERNET
150.10.1.0/30
2001:150:10:1::/64
150.20.2.0/30
2001:150:20:2::/64
PC1
PC2
E0/0
E0/0
NOTE: All Router interfaces on each of their subnets is their router ID number.
For Switch SVI interfaces, it is noted in the topology.
200.221.1.0/24
2001:200:221:1::/64
200.222.2.0/24
2001:200:222:2::/64
VRF Site1
VRF Site2
VRF Site1 Infrastructure Links:
172.21.xxx.yyy/24
2001:172:21:xxx::yyy/64
Where xxx = vlan ID
yyy = router number
VRF Site2 Infrastructure Links:
172.22.xxx.yyy/24
2001:172:22:xxx::yyy/64
Where xxx = vlan ID
yyy = router number
S1/0
S1/1
E0/0.202
E0/0.201
E0/0.229
E0/0.209
E0/0.221
E0/0.191
E0/0.187
E0/0.178
E0/0.220
E0/0.222
E0/0.212
E0/0.89
E0/0.79
E0/0.68
E0/0.67
10.21.5.0/24
2001:10:21:5::/64
10.21.3.0/24
2001:10:21:3::/64
10.21.4.0/24
2001:10:21:4::/64
10.22.5.0/24
2001:10:22:5::/64
10.22.6.0/24
2001:10:22:6::/64
10.22.3.0/24
2001:10:22:3::/64
10.22.4.0/24
2001:10:22:4::/64
SVI 178
.55
::55
10.21.1.0/24
2001:10:21:1::/64
10.21.2.0/24
2001:10:21:2::/64
SVI 68
SVI 67
.66
::66
10.22.2.0/24
2001:10:22:2::/64
10.22.1.0/24
2001:10:22:1::/64

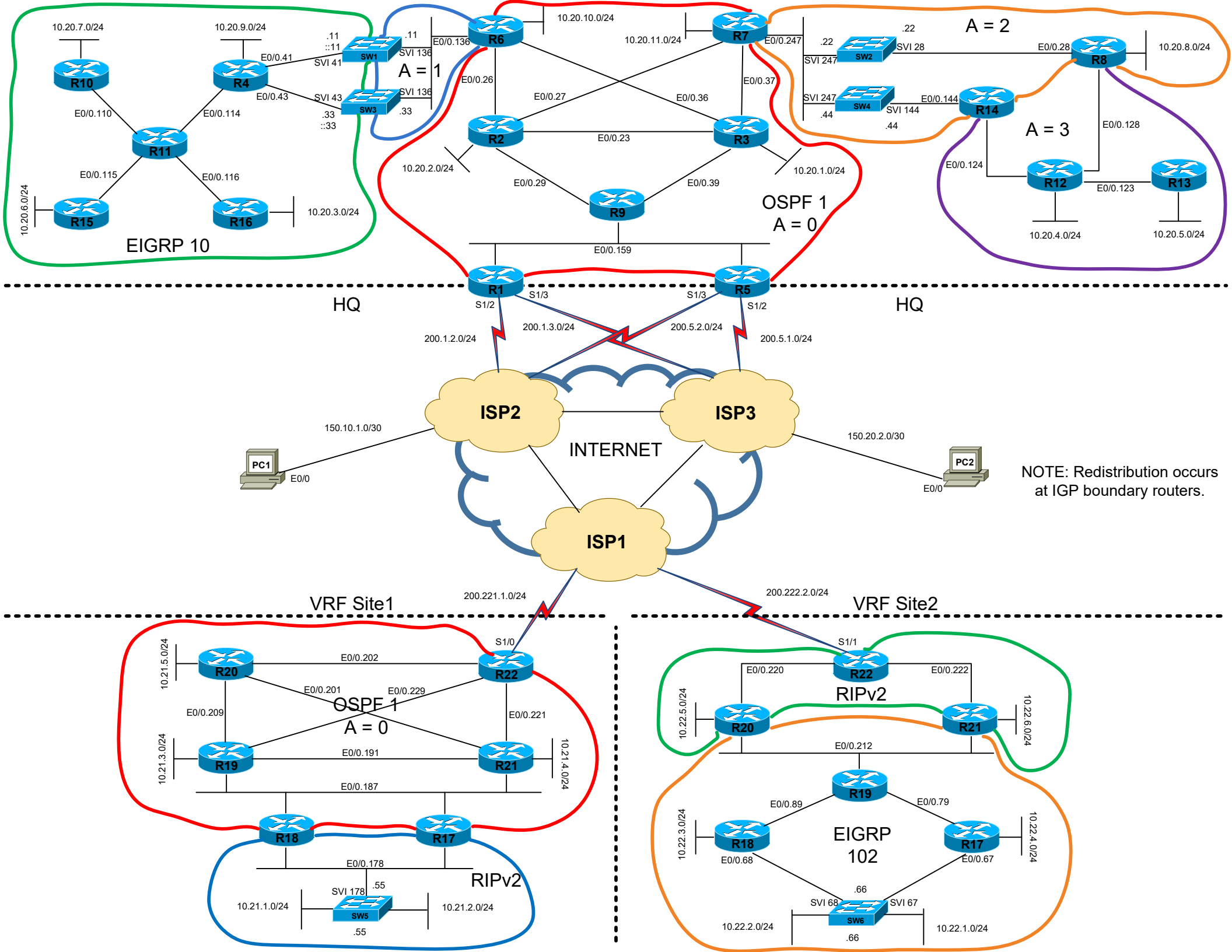
10.20.7.0/24
10.20.9.0/24
.11
::11
SVI 41
E0/0.41
SW1
.11
SVI 136
E0/0.136
R6
10.20.10.0/24
10.20.11.0/24
R7
E0/0.247
.22
SW2
SVI 28
A = 2
E0/0.28
R8
10.20.8.0/24
R10
R4
A = 1
E0/0.26
E0/0.27
E0/0.36
E0/0.37
SVI 247
SW4
SVI 144
E0/0.144
R14
.44
E0/0.110
E0/0.114
E0/0.43
SVI 43
SW3
SVI 136
.33
::33
R11
R2
E0/0.23
R3
A = 3
E0/0.128
10.20.2.0/24
10.20.1.0/24
E0/0.124
E0/0.115
E0/0.116
E0/0.29
E0/0.39
R12
E0/0.123
R13
10.20.6.0/24
R15
R16
10.20.3.0/24
R9
OSPF 1
A = 0
10.20.4.0/24
10.20.5.0/24
EIGRP 10
E0/0.159
R1
R5
HQ
S1/2
S1/3
S1/3
S1/2
HQ
200.1.2.0/24
200.1.3.0/24
200.5.2.0/24
200.5.1.0/24
ISP2
ISP3
150.10.1.0/30
INTERNET
150.20.2.0/30
PC1
E0/0
PC2
E0/0
NOTE: Redistribution occurs
at IGP boundary routers.
ISP1
VRF Site1
200.221.1.0/24
200.222.2.0/24
VRF Site2
S1/0
S1/1
10.21.5.0/24
R20
E0/0.202
R22
E0/0.201
E0/0.229
OSPF 1
A = 0
E0/0.209
E0/0.221
10.21.3.0/24
R19
E0/0.191
R21
10.21.4.0/24
E0/0.187
R18
R17
E0/0.178
RIPv2
SVI 178
.55
10.21.1.0/24
SW5
10.21.2.0/24
.55
E0/0.220
E0/0.222
RIPv2
10.22.5.0/24
R20
R21
10.22.6.0/24
E0/0.212
R19
E0/0.89
E0/0.79
10.22.3.0/24
R18
EIGRP
102
R17
10.22.4.0/24
E0/0.68
E0/0.67
.66
SVI 68
SVI 67
10.22.2.0/24
SW6
10.22.1.0/24
.66

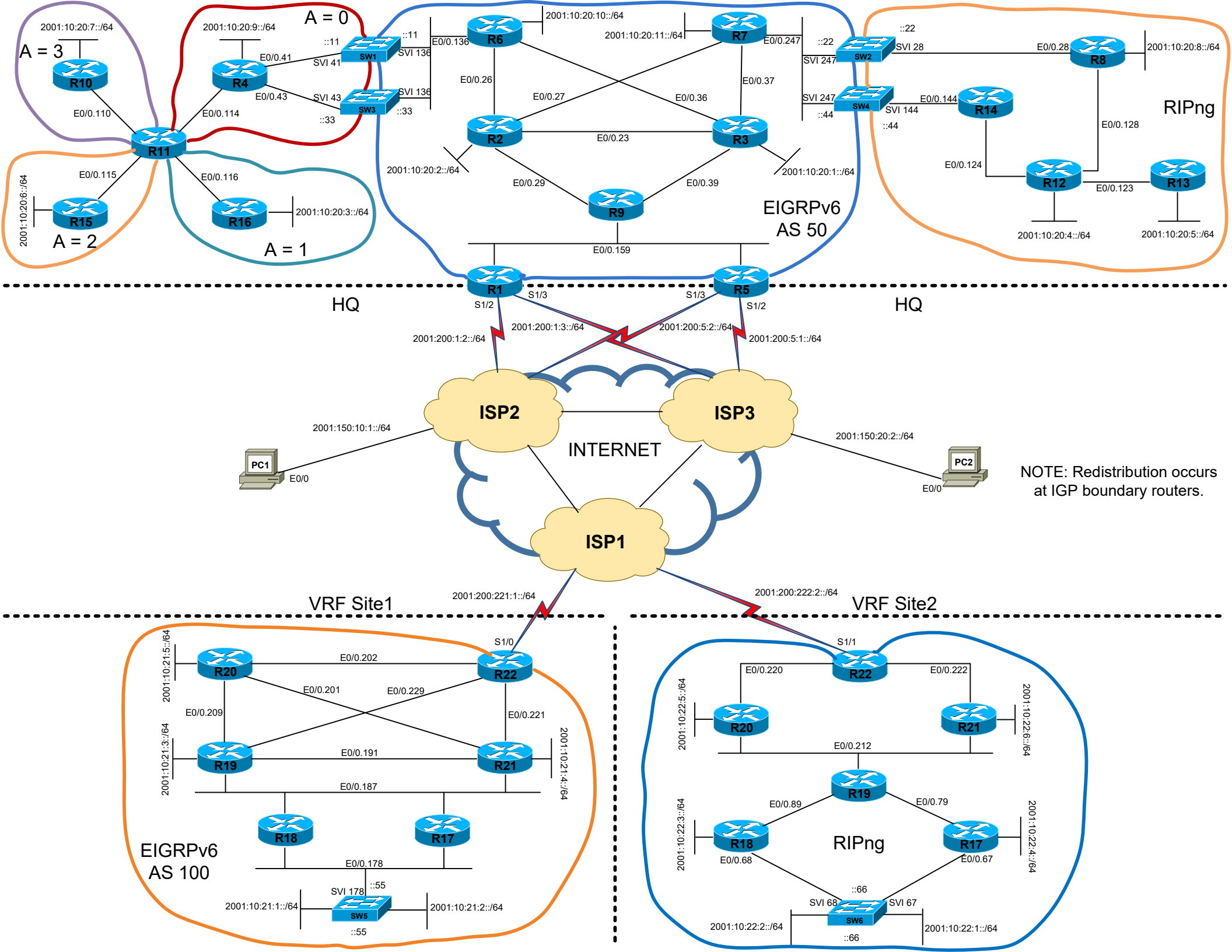
A = 3
A = 0
A = 2
A = 1
2001:10:20:7::/64
2001:10:20:9::/64
2001:10:20:6::/64
2001:10:20:3::/64
2001:10:20:10::/64
2001:10:20:11::/64
2001:10:20:2::/64
2001:10:20:1::/64
2001:10:20:8::/64
2001:10:20:4::/64
2001:10:20:5::/64
R10
R4
R11
R15
R16
R6
R7
R2
R3
R9
R8
R14
R12
R13
R1
R5
SW1
SW2
SW3
SW4
E0/0.110
E0/0.114
E0/0.115
E0/0.116
E0/0.41
E0/0.43
E0/0.136
E0/0.26
E0/0.27
E0/0.36
E0/0.37
E0/0.23
E0/0.29
E0/0.39
E0/0.159
E0/0.247
E0/0.28
E0/0.144
E0/0.128
E0/0.124
E0/0.123
SVI 41
SVI 43
SVI 136
SVI 28
SVI 247
SVI 144
::11
::33
::22
::44
RIPng
EIGRPv6
AS 50
HQ
HQ
S1/2
S1/3
S1/3
S1/2
2001:200:1:2::/64
2001:200:1:3::/64
2001:200:5:2::/64
2001:200:5:1::/64
ISP2
ISP3
ISP1
INTERNET
2001:150:10:1::/64
2001:150:20:2::/64
PC1
PC2
E0/0
E0/0
NOTE: Redistribution occurs
at IGP boundary routers.
VRF Site1
VRF Site2
2001:200:221:1::/64
2001:200:222:2::/64
S1/0
S1/1
R20
R22
R19
R21
R18
R17
SW5
SW6
E0/0.202
E0/0.201
E0/0.229
E0/0.209
E0/0.221
E0/0.191
E0/0.187
E0/0.178
2001:10:21:5::/64
2001:10:21:3::/64
2001:10:21:4::/64
SVI 178
::55
2001:10:21:1::/64
2001:10:21:2::/64
EIGRPv6
AS 100
E0/0.220
E0/0.222
E0/0.212
E0/0.89
E0/0.79
E0/0.68
E0/0.67
2001:10:22:5::/64
2001:10:22:6::/64
2001:10:22:3::/64
2001:10:22:4::/64
RIPng
SVI 68
SVI 67
::66
2001:10:22:2::/64
2001:10:22:1::/64

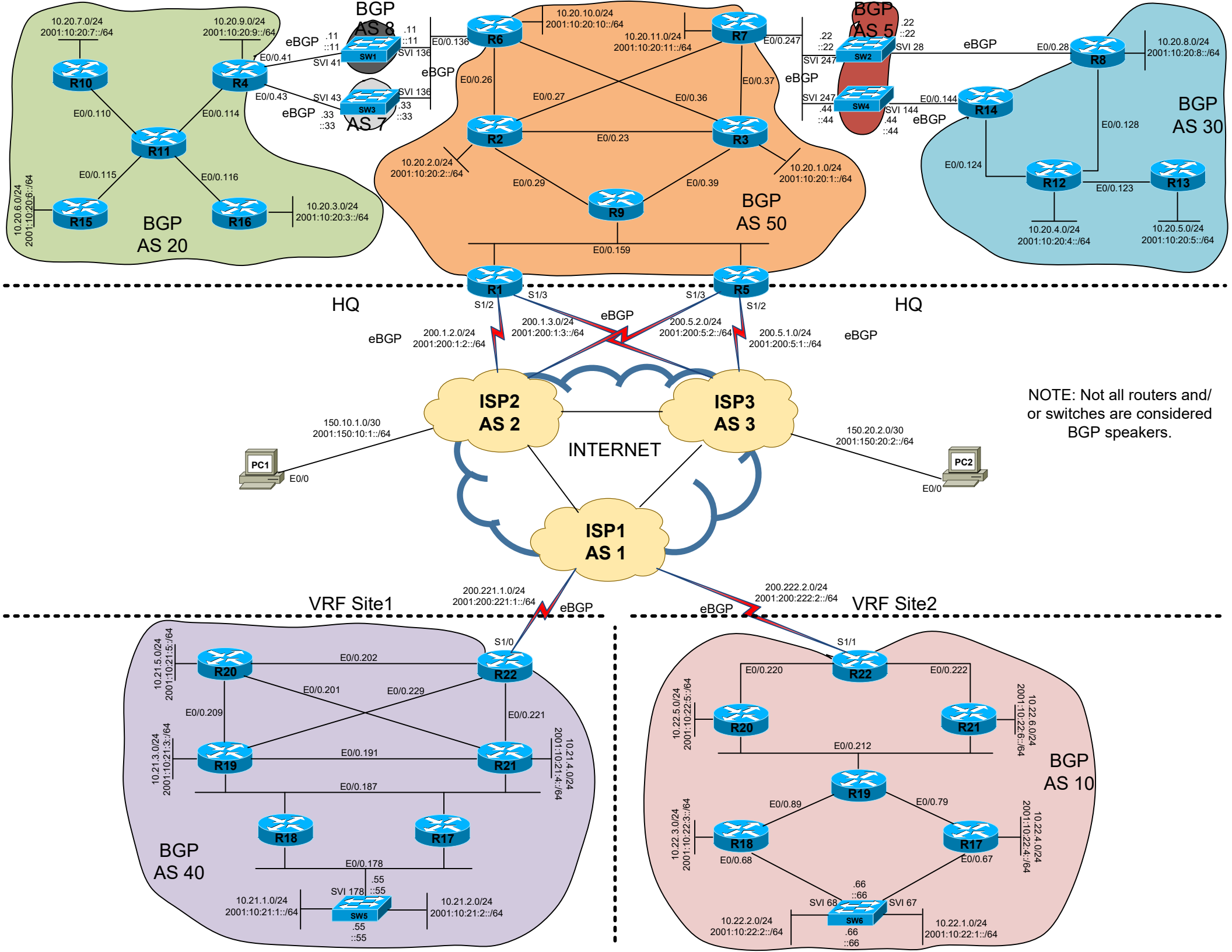
BGP AS 20
BGP AS 7
BGP AS 8
BGP AS 50
BGP AS 5
BGP AS 30
BGP AS 40
BGP AS 10
HQ
HQ
VRF Site1
VRF Site2
INTERNET
ISP1 AS 1
ISP2 AS 2
ISP3 AS 3
eBGP
10.20.7.0/24 2001:10:20:7::/64
10.20.9.0/24 2001:10:20:9::/64
10.20.6.0/24 2001:10:20:6::/64
10.20.3.0/24 2001:10:20:3::/64
10.20.10.0/24 2001:10:20:10::/64
10.20.11.0/24 2001:10:20:11::/64
10.20.2.0/24 2001:10:20:2::/64
10.20.1.0/24 2001:10:20:1::/64
10.20.8.0/24 2001:10:20:8::/64
10.20.4.0/24 2001:10:20:4::/64
10.20.5.0/24 2001:10:20:5::/64
200.1.2.0/24 2001:200:1:2::/64
200.1.3.0/24 2001:200:1:3::/64
200.5.2.0/24 2001:200:5:2::/64
200.5.1.0/24 2001:200:5:1::/64
150.10.1.0/30 2001:150:10:1::/64
150.20.2.0/30 2001:150:20:2::/64
200.221.1.0/24 2001:200:221:1::/64
200.222.2.0/24 2001:200:222:2::/64
10.21.5.0/24 2001:10:21:5::/64
10.21.3.0/24 2001:10:21:3::/64
10.21.4.0/24 2001:10:21:4::/64
10.21.1.0/24 2001:10:21:1::/64
10.21.2.0/24 2001:10:21:2::/64
10.22.5.0/24 2001:10:22:5::/64
10.22.6.0/24 2001:10:22:6::/64
10.22.3.0/24 2001:10:22:3::/64
10.22.4.0/24 2001:10:22:4::/64
10.22.2.0/24 2001:10:22:2::/64
10.22.1.0/24 2001:10:22:1::/64
NOTE: Not all routers and/ or switches are considered BGP speakers.

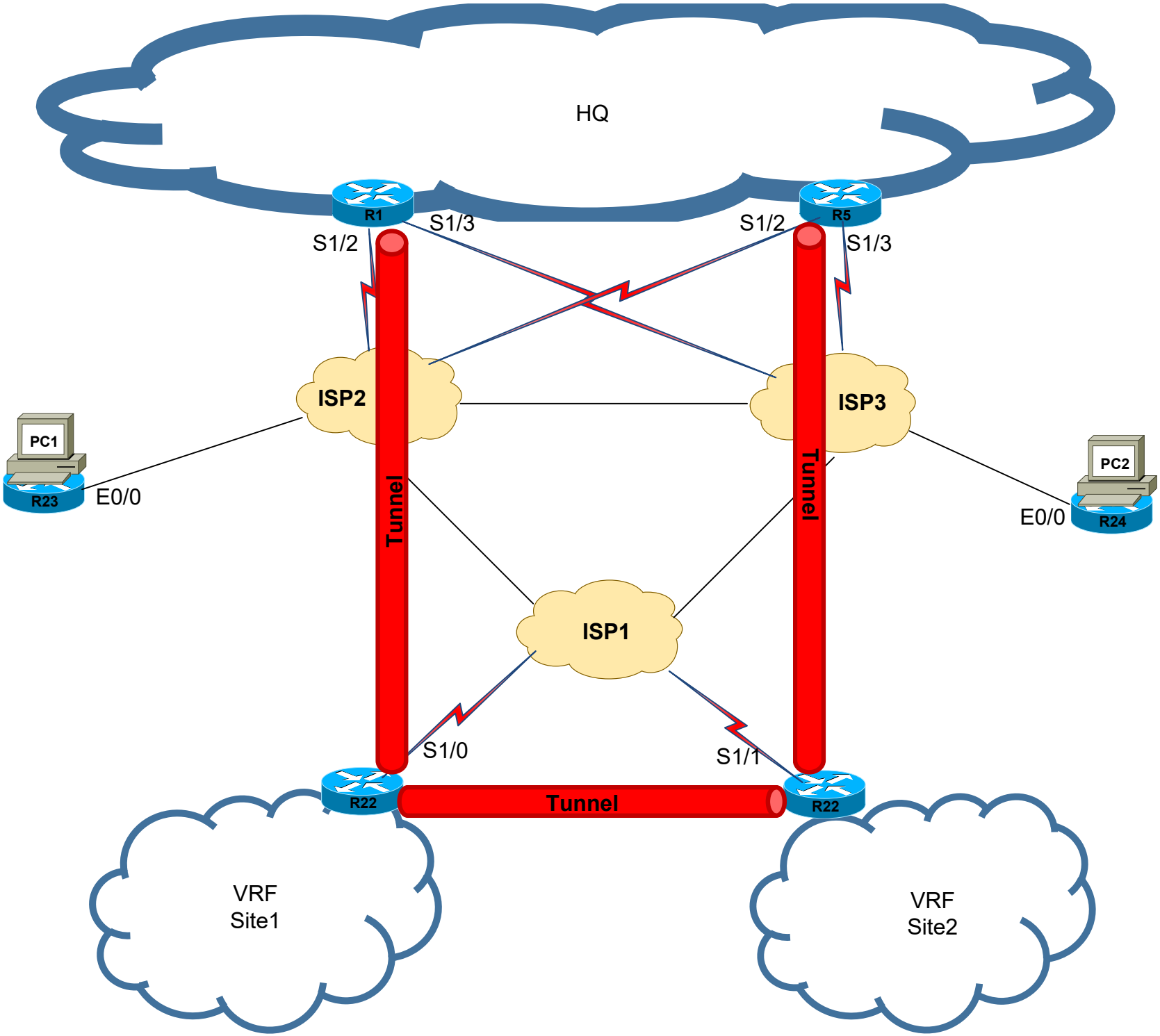
HQ
R1
R5
S1/2
S1/3
S1/2
S1/3
ISP2
ISP3
PC1
R23
E0/0
Tunnel
Tunnel
PC2
R24
E0/0
ISP1
S1/0
S1/1
R22
Tunnel
R22
VRF
Site1
VRF
Site2

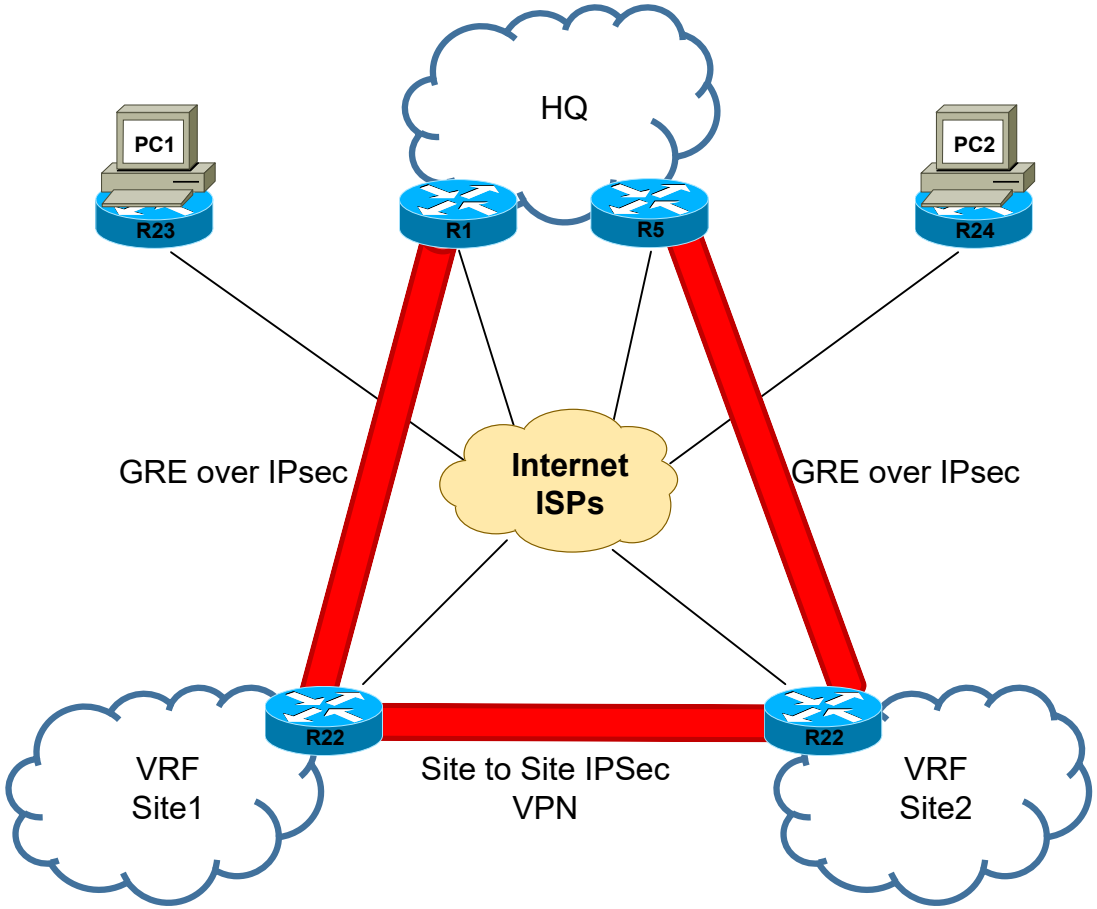
HQ
PC1
PC2
R23
R1
R5
R24
GRE over IPsec
Internet
ISPs
GRE over IPsec
R22
R22
VRF
Site1
Site to Site IPSec
VPN
VRF
Site2